Shower mixer Care - Singel lever

Lead free, connection down, 150 c-c

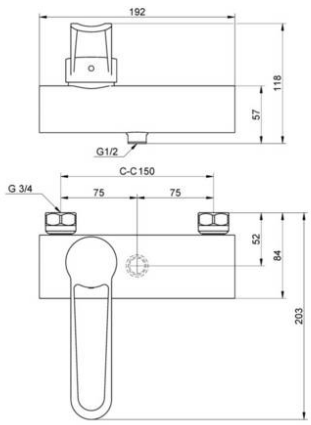

Product features

- Elongated, grip-friendly lever with clear color marking for hot and cold water
- Soft move, ceramic package with smooth and precise operation
- Eco-stop, adjustable maximum flow limitation

Article number etc.

RSK-nr:	ART-nr:	EAN-nr:
	GB41212014064	7391530081755

Packaging
L: 210,00 x W: 145,00 x H: 92,00 mm.
Weight: 1,96 kg

Energy labeling and certifications

Assembling & Care

Prior to installation the lines must be flushed up to the faucet. The faucet is connected with the cold water line on the right and the hot water line on the left. Water pressure: max 1000 kPa, min 50kPa. Hot water temperature: max 80°C, min 45°C. Please note that we are not liable for damage resulting from improper installation.

Dokumentet skapat den 2024-05-14

Villeroy & Boch Gustavsberg AB / Box 400, 134 29 Gustavsberg, Sweden / Tel: +46 (0) 8-570 391 00 | Fax +46 8 570 320 36 /

www.gustavsberg.com / info@gustavsberg.com