Kitchen mixer Nordic³ - high spout

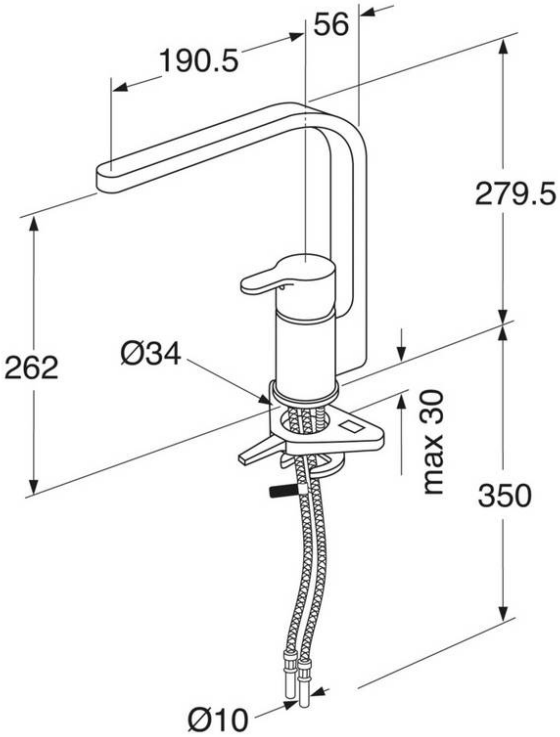

Product features

- Adjustable comfort flow (water-saver)
- Pivoting spout 110°
- Adjustable max temperature for increased scald protection

Article number etc.

RSK-nr:	ART-nr:	EAN-nr:
	GB41203056	7393792229395

Packaging
L: 440,00 x W: 280,00 x H: 70,00 mm.
Weight: 1,86 kg

Energy labeling and certifications

- Complies with Safe Water installation requirements.

1002 CERTIFIERING KONTROLL RI. SE

Assembling & Care

Prior to installation the lines must be flushed up to the faucet. The faucet is connected with the cold water line on the right and the hot water line on the left. Water pressure: max 1000 kPa, min 50kPa. Hot water temperature: max 70°C, min 45°C. Please note that we are not liable for damage resulting from improper installation.

Dokumentet skapat den 2024-05-13

Villeroy & Boch Gustavsberg AB / Box 400, 134 29 Gustavsberg, Sweden / Tel: +46 (0) 8-570 391 00 | Fax +46 8 570 320 36 /

www.gustavsberg.com / info@gustavsberg.com