# Toilet seat Estetic 9M10 - Rigid fixings

White

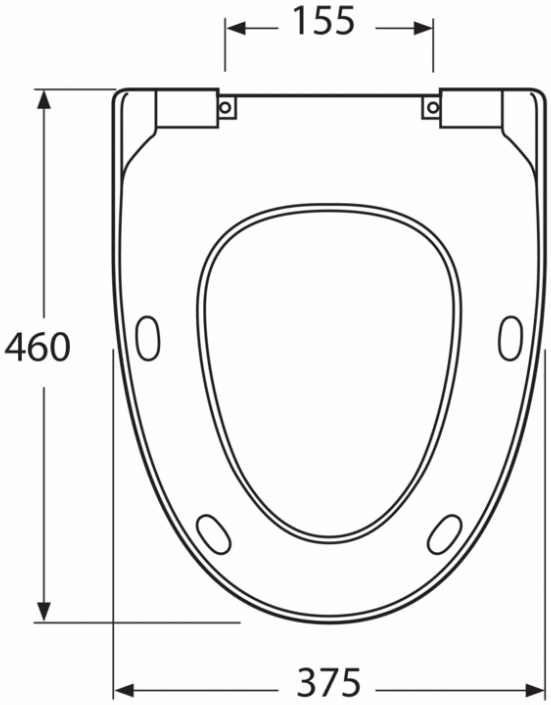


## Product features

- Made from high-quality hard plastic
- Fits Estetic 8300
- Stainless steel rigid fixings

## Article number etc.

| RSK-nr: | ART-nr: | EAN-nr: |
|---|---|---|
| | 9M106101 | 4051202336264 |

Packaging
L: 460,00 x W: 383,00 x H: 49,00 mm.
Weight: 2,80 kg

## Energy labeling and certifications

Dokumentet skapat den 2024-04-23

Villeroy & Boch Gustavsberg AB / Box 400, 134 29 Gustavsberg, Sweden / Tel: +46 (0) 8-570 391 00 | Fax +46 8 570 320 36 /

www.gustavsberg.com / info@gustavsberg.com