# Washbasin Artic Small 4G36 - 36 cm

## Basin on right, faucet hole on left. Matt black

## Product features

- Small model suitable for tight spaces
- Same colour as Estetic toilets

## Article number etc.

| RSK-nr: | ART-nr: | EAN-nr: |
|---|---|---|
| | 4G369R38 | 4065467445227 |

Packaging
L: 375,00 x W: 140,00 x H: 245,00 mm.
Weight: 5,60 kg

## Energy labeling and certifications

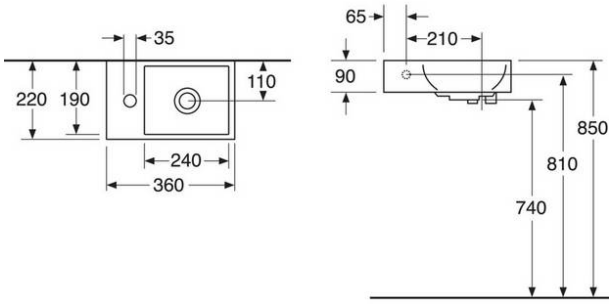


Dokumentet skapat den 2024-05-17

Villeroy & Boch Gustavsberg AB / Box 400, 134 29 Gustavsberg, Sweden / Tel: +46 (0) 8-570 391 00 | Fax +46 8 570 320 36 /

www.gustavsberg.com / info@gustavsberg.com